INSTALLATION, MAINTENANCE AND SERVICE INSTRUCTIONS FOR THE

MODEL 31

ELECTRO-PNEUMATIC CAR RETARDER

INSTRUCTION PAMPHLET

U-5303

JANUARY, 1958

UNION SWITCH & SIGNAL
DIVISION OF WESTINGHOUSE AIR BRAKE CO.
SWISSVALE, PA.

INSTALLATION, MAINTENANCE AND SERVICE INSTRUCTIONS FOR THE

MODEL 31 ELECTRO-PNEUMATIC CAR RETARDER

INSTRUCTION PAMPHLET

U-5303

JANUARY, 1958

UNION SWITCH & SIGNAL
DIVISION OF WESTINGHOUSE AIR BRAKE CO.
SWISSVALE, PA.

BO.58-1M-1.58.2 PRINTED IN U.S.A.

CONTENTS

Model 31 Electro-Pneumatic Car Retarder

PAGE

I. General 5

A. Description 5

B. Characteristics 6

C. Materials 7

D. Maintenance 8

E. Lubrication 8

II. Drawings, Tools and Gages 9

A. Drawings 9

B. Tools and Gages 9

III. Assembly 10

A. Cylinder Units 10

B. General Assembly 11

IV. Adjustment of Brake Shoes 16

V. Lubrication 18

A. Cylinder Unit Assembly 18

B. Method and Frequency of Lubrication . . . 20

VI. Reconditioning 21

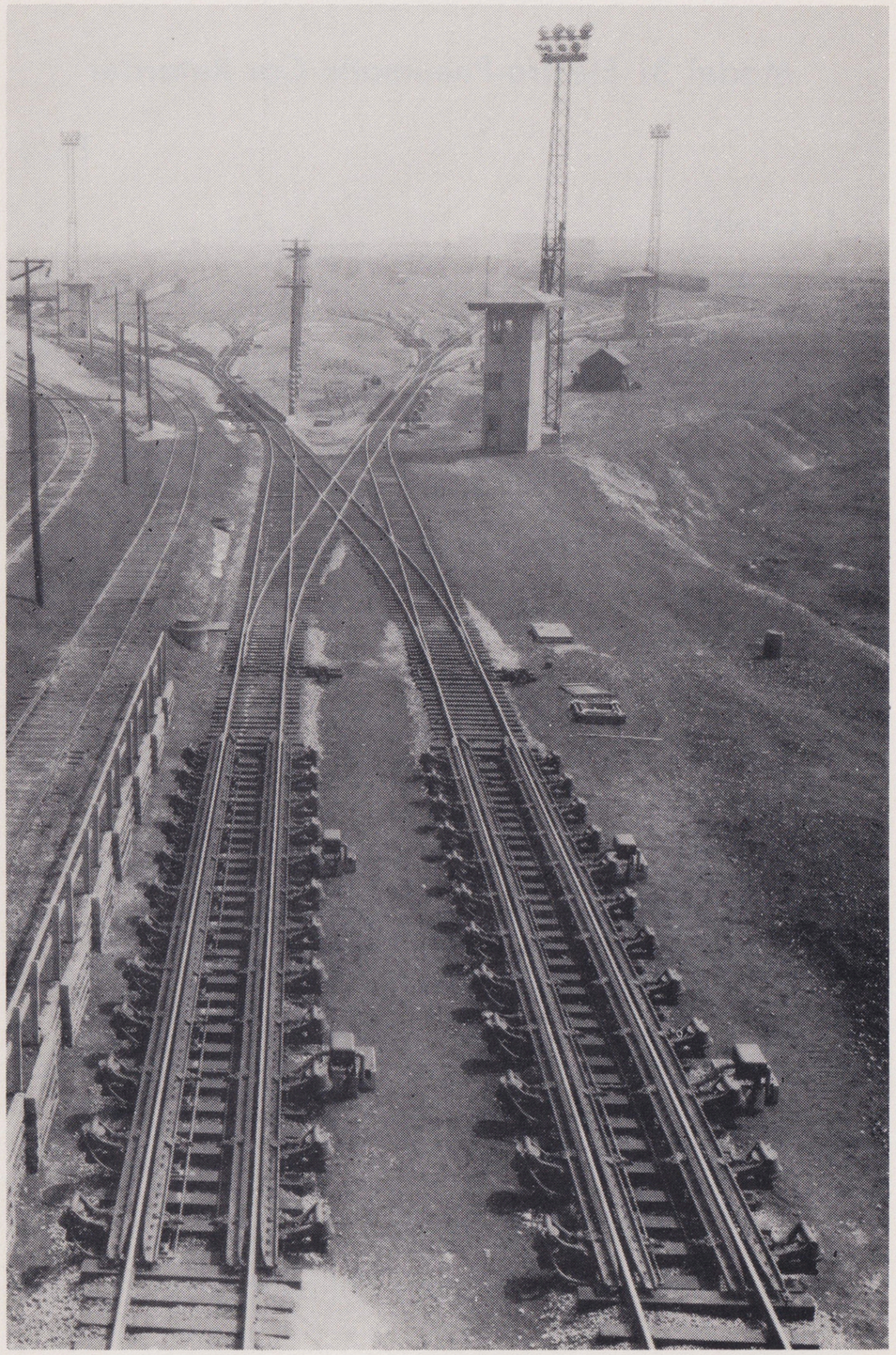

Installation, Maintenance and Service Instructions for Model 31 Electro-Pneumatic Car Retarder

I. GENERAL

A. Description (See Figures 5, 6, and 7)

The Model 31 Electro-Pneumatic Car Retarder is composed of a series of simple self-contained interchangeable cylinder units, spaced every third tie, on each side of the track, to which the brake beams and their associated brake shoes are attached.

The cylinder units consist essentially of a pneumatic cylinder and a pair of levers which are connected together, and which separately, and as a unit, can swing around a common pin. This pin, called the lever fulcrum pin, is supported at each end in rail support bearings which rest on the ties. The levers are centered with relation to the rail by means of a spring bolt assembly which is mounted in a housing formed in the lower lever.

The air to each cylinder is supplied through pipes and hose connections to the retarder cylinders from a control valve. The valve is controlled from the tower to provide various pressure ranges. When air is admitted to the cylinder, the levers move the brake beams and shoes into engagement with the car wheels in a manner similar to the action of a pair of pliers. When air is vented from the cylinder, the upper lever, which carries the outside brake beams, moves to its open position by gravity and comes to rest when the upper lever spring nuts strike bosses provided on the rail support bearings. The lower lever, which carries the inside brake beams, moves to its open position

through the combined effect of gravity and the lower lever return spring, and comes to rest when the piston is pushed all the way back in the cylinder. The upper lever stop springs and the lower lever centering spring arrangements are so designed that, with the retarder in either its closed or open position, the levers and cylinder, and their associated brake beams and shoes, can swing as a unit about the lever fulcrum pin an amount equivalent to at least ½ in. travel of the brake shoes either side of their positions shown on Fig. 7. With the retarder in the closed position, this permits the brake shoes to adjust themselves to the various gages of car wheels, and with the retarder in the open position, permits the brake shoes to adjust themselves to allow the passage of locomotives having unusually wide gage driving wheels.

B. Characteristics

Inasmuch as the braking pressure on the car wheels is applied directly through the levers by air pressure in the cylinders, it is not affected by thickness of car wheels or depth of flanges. Because the cylinder and lever assembly is free to rotate about a single fulcrum pin, the internal friction of the retarder is very low and the pressure on both sides of the car wheels is equalized and not affected by spacing of wheels on the axle.

The arrangement of the brake beams and cylinder unit is such that pressure on the car wheels for any given air pressure in the cylinder is substantially constant as the car passes through the retarder and is not affected by the number of wheels in the retarder at one time. Retardation is therefore not reduced by variations in wheel width, and high concentrations of pressure on car wheels such as might cause light cars to be squeezed out from between the brake shoes are avoided. As an additional precaution guide rails are provided at the end of the retarder to prevent any car which might be raised from being derailed.

Air pressure in the cylinder (and therefore the retardation) can be increased or decreased as desired with the car in the retarder. The resultant change in effective retardation takes place almost instantly and without the movement of any parts. The relative movement of parts when the retarder is moved between its open and closed positions is extremely small. Brake shoes are arranged to span the joint between adjacent brake beam sections resulting in cars being retarded smoothly and quietly, thus reducing the shock and wear on car retarder parts.

The retarder can be installed on a curve. It can be arranged as either a single or double-rail retarder and made up in any desired length. In lengths over 44 ft. (7 cylinder units on one side), however, the control and piping should be sectionalized by using enough independently-operated control valves so that no section controlled by any one valve has over 14 cylinders.

The retarder is universal in application; that is, the same parts and assembly may be applied to either a right-hand or left-hand rail without change, and the valve can be located on either the right-hand or left-hand side.

The pipe line is the only metallic connection between the two sides of the retarder, and by insulating this, track circuits may be run through the retarder. Track circuits can be ended within the retarder by installing an insulated rail joint and two pairs of right and left hand end brake beams or, where a number of successive track circuits are required in the retarder, the retarder can be furnished with insulated rail supports, in which case the shoes and beams are continuous beyond the insulated joints separating the track circuits.

C. Materials

High grade materials are used throughout in the construction of the retarder. The bearing surfaces of the levers which engage the pins are fitted with replaceable bushings. The

piston of the cylinder is a one-piece steel casting. Brake shoes are made from a specially rolled heat-treated medium manganese steel section whose physical properties have been selected by field tests to give the best combination of holding power and wear.

D. Maintenance

The various parts of the retarder are readily accessible for inspection and replacement. Shut-off valves are provided in the air supply lines to each cylinder unit so that any portion of the retarder can be cut out without affecting the remainder, and it is possible to remove a complete cylinder unit without taking the retarder out of service. Adjustment for brake shoe wear can be readily made and special gages for checking the adjustment and taking up slack are provided. A set of six wrenches is furnished with the retarder, for tightening the various bolts used in assembly. There is ample space for tie tamping. Snow falls clear of the rail and working parts of the retarder. Ties do not have to be dapped.

Since the retarder is made up of a series of interchangeable cylinder units, only relatively few parts need to be carried in stock for maintenance purposes to provide maximum protection. The retarder uses only three types of pins and only two types of bushings. The joining surfaces of the brake beams, the connections between brake beams and adjusting screws, and the hold-down bolt nuts and the surfaces they engage are hardened to give maximum wear resistance, and if necsssary, can be readily resurfaced by welding, using hard surface material.

E. Lubrication

Bearings are provided with grease grooves and arranged for lubrication by means of Alemite fittings located at accessible positions.

II. DRAWINGS, TOOLS AND GAGES

A. Drawings

A complete set of drawings covering the various assemblies and layouts for each job will be supplied to the railroad when installation is made. For maintenance purposes, drawings of the more commonly used layouts and assemblies have been inserted in this pamphlet.

B. Tools and Gages

Fig. 4 shows special tools and gages for installation and maintenance of Model 31 Car Retarders.

A Pneumatic Impact Wrench is recommended for tightening brake beam hold-down bolts. It can also be used for turning the brake beam adjusting screws and other bolted assemblies. References for commercial tools useful in maintaining a retarder yard will be furnished on request.

III. ASSEMBLY

A. Cylinder Units

1. The various cylinder units should be assembled on the ties in accordance with Fig. 7. The holes in the ties should be accurately spaced and drilled square with the top of the tie so that assemblies will fit in place easily. This may be done at some convenient location, and preferably one where a chain tackle or crane is available, or may be set up. The maximum weight of the various parts is approximately 300 lb., and the weight of the two complete cylinder units, assembled on a pair of ties, is approximately one and one half tons.
2. All lever pins, pin retainers, and holes into which they are assembled, and the spring housing in the lower lever should be packed with approximately 2 lb. of grease. Grease conforming to U. S. & S. Spec. No. M-7650-01 (Formerly Spec. No. 2513) is recommended —See Catalog Plate P-8000 for specification.
3. The lower lever spring bolt nut should be tightened securely, using wrenches, References 3 and 4, Fig. 4, and the 1/4 in. by 1 3/4 in. cotter pin inserted back of the nut.
4. Adjust the upper lever so that with the retarder in the open position, i.e., no air in the cylinder, the distance from the top of the ties to the center line of the upper lever pin is 17 3/4 in. This adjustment is made by adjusting the length of the upper lever stop springs. There are two of these springs on each upper lever, and they should be adjusted so that both stop spring nuts bear on their respective rail support bearings. The upper lever stop spring nut may be held from turning by using wrench, Ref. 3, Fig. 4, and the actual adjustment made by turning the 1 in. bolt.

B. General Assembly

The general assembly of the retarders should be made in accordance with Figs. 5 and 6. A blueprint of the assembly will be furnished if special combinations have been found necessary. The assembly may be made either in the track or at some convenient point from which it can be moved to its place in the track by means of a locomotive crane.

1. If the retarder is to be assembled in position in the track, approximately 16 hours should be allowed for a 12 unit double-rail retarder, and all the preliminary work possible should be done in advance.
   a. Space the complete cylinder units accurately 6 ft. 3 in. apart, center line to center line. The cylinder units having the smaller cylinders should be located at the entering end of the retarder. It is essential that the units be spaced accurately in order that the brake beams and brake shoes will fit properly.
   b. Fasten the intermediate and end rail supports to their ties and place them in position.
   c. Install rail. Cast steel guide rails are furnished for double-rail retarders, and should be installed at the leaving end. A well braced guard rail, providing a minimum of 2 in. flangeway should be furnished by the railroad company for single-rail retarders, and installed as shown on Fig 6, on the rail opposite the retarder. The guard rail is to prevent cars from being derailed should they be raised in the retarder, but it should provide sufficient flangeway to clear the wheels during normal operation, because otherwise it might prevent slow running, or stalled cars which have been released, from moving out of the retarder. The rails which run through the retarder may, when necessary, for large rails, be spliced

over the intermediate rail support and, for smaller rails, may be spliced between the intermediate rail support and the rail support bearing. It may be necessary in some cases to use a special thin splice bar.

d. Install brake beams in accordance with arrangements shown on Fig. 5, starting with the right-hand end brake beams on each line. The pairs of right and left-hand end brake beams which are installed at an insulated point are the same as ones at entering and leaving end of retarders, except that the supporting lug at the tapered end is removed in order to provide clearance for the insulated rail joint. The brake beams may be conveniently handled by means of rail tongs. In applying brake beam hold-down bolts and nuts, be sure that the shank of the nut fits into the groove provided for it in the bottom of the brake beams. The bolts should be tightened securely, using T-socket wrench, Ref. 5, Fig. 4, or a pneumatic impact wrench, preferably the latter. They should be tightened after several days' service. The bolt is provided with a self-locking thread and may have to be backed off slightly so as to break the gripping action before it can be tightened.

e. Install brake shoes in accordance with arrangement shown on Figs. 5 and 6. The brake shoes should be installed so as to span the joint between adjacent brake beams and be fastened to both, ending at the center of the brake beams. All of the brake shoe bolts should be inserted in any particular brake shoe before any of the nuts are securely tightened. A beveled washer is used under

the nut, and ratchet wrench, Ref. 14, Fig. 4, may be used for tightening the nuts.

f. Install piping.

2. If the retarder is to be lifted as a complete unit and installed in the track, it should be first assembled on ties with the rail in place. Fig. 1 and 2 show the method of attaching the lifting chains to the retarder. The chains are placed around the beams and under the rail with wooden blocks between the brake shoes to hold them in their open position. Chains must be adjusted so that the retarder will balance properly when lifted. Fig. 3 shows the retarder being carried forward into position by a crane.

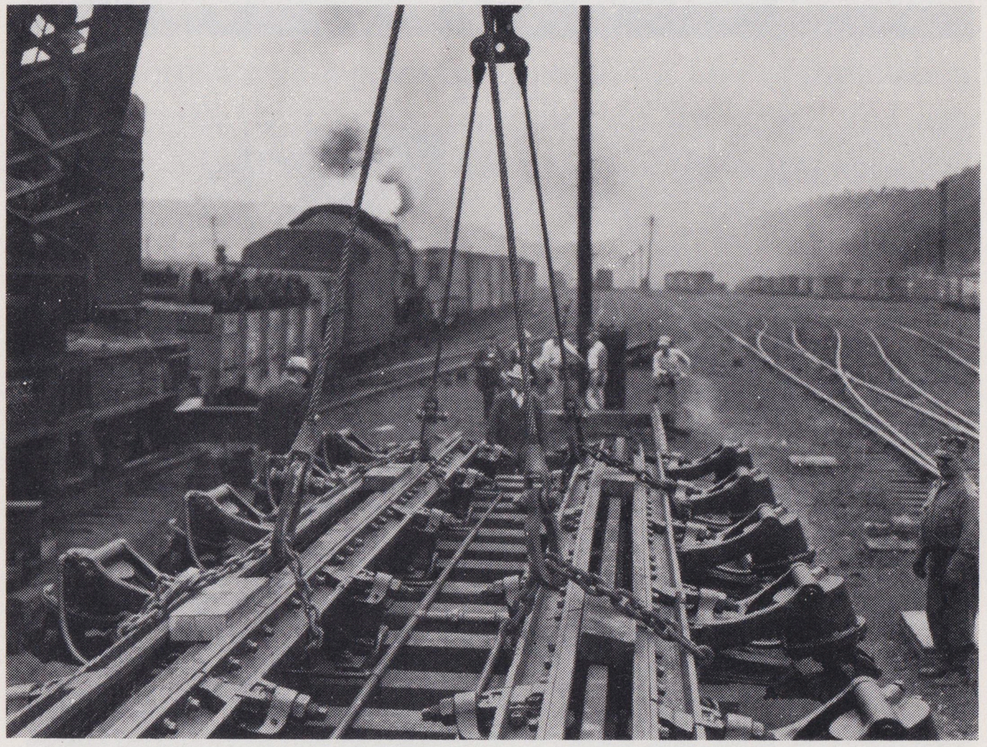

FIG. 1

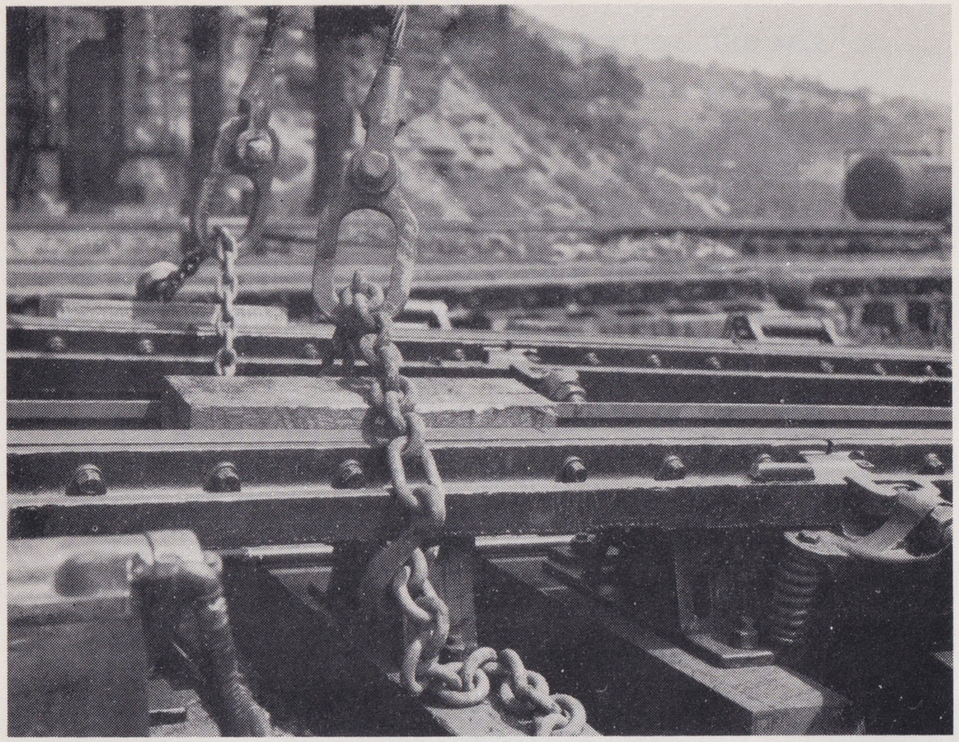

FIG. 2

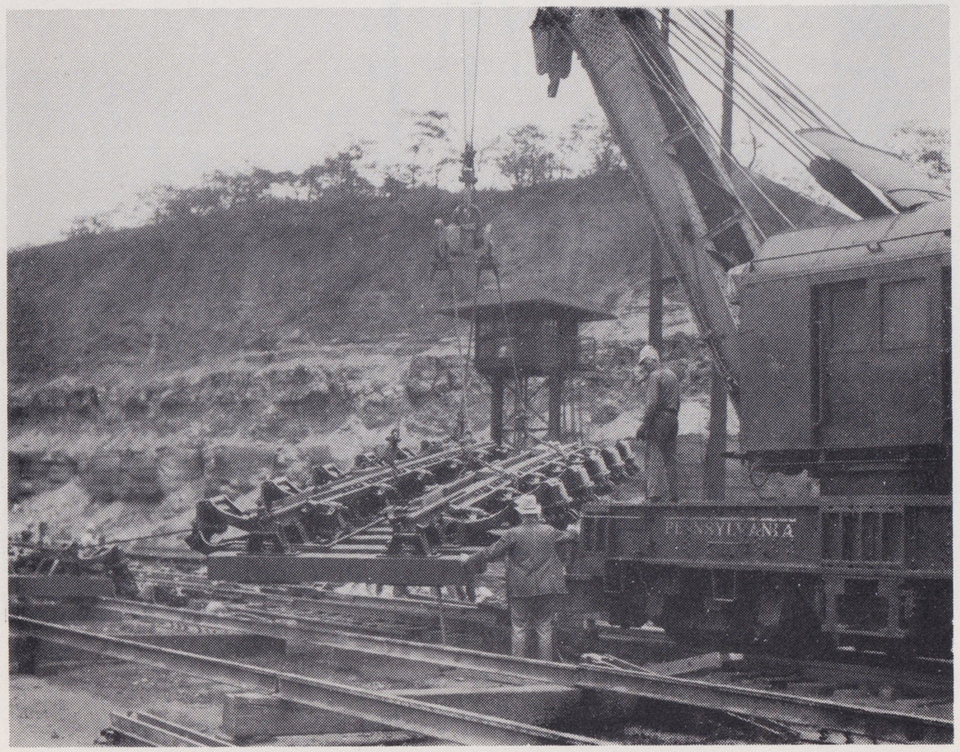

FIG. 3

a. Sections 7 units long (14-cylinder double-rail) can be handled at one time. Sections 14 units long can be handled using 2 cranes, but it is preferable to handle them in two separate sections. The weight of a twelve cylinder unit double rail Model 31 retarder, complete with ties, rail and guide rails, is approximately 19 tons.

b. The ballast should be leveled off to the proper height before the retarder is set on it. Crushed rock or slag ballast is recommended. The retarder is very accessible for tamping, and should be kept tamped up in proper alignment. Particular care should be taken in preparing the bed for a retarder installed on filled in earth to prevent sinking.

3. Install the valve foundation, valve and piping in accordance with plans furnished at the time of installation. Install the retarder controllers in the tower, and connect control wires in accordance with an approved wiring diagram.

4. Paint with a good grade of weather-resisting black paint such as U. S. & S. Class 10, Spec. No. 509. The parts of the retarder have been given a rust-resisting priming coat at the factory.

5. After the retarder has been in service for a few days, the various bolts should be tightened.

IV. ADJUSTMENT OF BRAKE SHOES (Fig. 7)

The brake shoes can be adjusted by turning the brake beam adjusting screws, using wrench, Ref. 4, Fig. 4. After the proper adjustment has been obtained, the screw should be locked by means of its lock nut. This lock nut should be tightened securely, using wrench, Ref. 3, Fig. 4. Wrench, Ref. 13, which has a long handle may also be used if parts are difficult to start or to keep tight. The exposed threads of the adjusting screws should be kept well coated with a rust-proof compound such as U. S. & S. C. N. 41092, to prevent rusting, and it is suggested that the adjusting screws be run in and out their full adjustment at least once a year, if such an adjustment has not been required to compensate for brake shoe wear. The pneumatic impact wrench recommended for tightening the brake beam hold down bolts may be used for this purpose.

Brake shoe gages, Ref. 2, Fig. 4, placed as shown on Fig. 7, should be used in making the adjustment. A brake shoe gage should be placed between the brake shoes at each cylinder unit with the large end of the gage toward the gage side of the rail, and the retarder closed by at least 20 lb. air pressure (any one of the operating pressures may be used). The brake shoe gage is a spring device, and telescopes when the brake shoes are closed on it, the spring being strong enough to take up the lost motion in the various parts. It has marks cut into its circumference for indicating the proper relation of the inside brake shoes to the rail, and also the proper gage of the retarder. The gage of the retarder is the clear distance between the bearing surface of the pairs of inside and outside brake shoes. In using the gage the groove that is 1⅜ in. back from the end should be lined up with the actual gage side of the rail head and not from the wear. If the rail through the retarder becomes worn or is not to proper gage, it is necessary

to allow for this in adjusting the brake shoes because the alignment obtained using the adjusting gage is based on the rail being to gage. The adjustment should be such that when a car is retarded, the upper lever will be pushed down and the lower lever pushed up. This avoids excessive deflection of brake shoes and increases their life.

The inside brake shoes should be adjusted first and should be so adjusted that the face of the brake shoes is 1⅜ in. to 1½ in. from the gage side of the rail. There is a groove on the brake shoe gage 1⅜ in. back from the end, for checking this adjustment. If the brake shoes are badly out of adjustment, they should be brought up to the correct adjustment by turning the adjusting screw on each cylinder unit a few turns at a time, and then passing on to the next one, because the adjustment of one unit affects that of the adjacent ones to some extent.

The outside shoes should then be adjusted so as to make the gage of the retarder 5 in. There is a groove on the gage which corresponds to the 5 in. dimension.

It is desirable to maintain the gage of the retarder 5⅛ in. at the entering end and leaving end, especially where cars enter the retarder nosed to one side.

V. LUBRICATION

Specification and ordering references covering the lubricants mentioned in the following instructions are given on Catalog Plate P-8000.

A. Cylinder Unit Assembly: (Fig. 7)

Each cylinder unit assembly has fifteen points of lubrication provided with pressure fittings, as indicated on Fig. 7, and should be lubricated as follows:

1. The upper and lower lever pin bearings, lever fulcrum pin bearings, and piston rod bearing should be lubricated through the fittings (9 in all) with grease meeting U. S. & S. Spec. No. M-7650-01 (Formerly Spec. No. 2513)—grease to be applied until some squeezes out through the end of the bearing.
2. The brake beam hold-down bolts, and brake beam adjusting screws are provided with fittings (4 in all), so that they may be lubricated to prevent rusting. When lubricating the brake beam adjustment screws, loosen lock nuts. Grease meeting U. S. & S. Spec. No. M-7650-01 (Formerly Spec. No. 2513) should be used.
3. The spring housing should also be lubricated with grease, Spec. No. M-7650-01 (Formerly Spec. No. 2513), through the fitting provided. This is not a closed bearing, so grease should not be applied until some forces out. Not more than 1/8 lb. need be applied at a time. Once a year the fittings and the bushing into which it is screwed should be removed, and about 1/2 pt. of medium oil applied. The condition of this spring housing assembly can best be determined by observing from time to time the condition of the spring bolt parts which are exposed beneath the housing.
4. Retarder Cylinders.

   a. Retarder cylinders furnished previous to May, 1941 have the lubricating fitting located at the bottom of the piston rod. To lubricate, apply 1/2 oz. (15 to 20 shots of grease gun) of cylinder lubricant U. S. & S. Spec. No. M-7651-2 (Formerly Spec. No. M-158-1) through the fitting. When the cylinder is kept properly lubricated, a small amount of grease will continue to be forced out through the joint between the cylinder body and the cylinder head during normal operation.
   b. Retarder cylinders furnished between May, 1941 and August, 1946 have a lubricating fitting located at the botton of the piston rod and a grease overflow plug in the cylinder flange. To lubricate, remove grease overflow plug in cylinder flange. Move retarder to closed position and apply grease U. S. & S. Spec. No. 7651-2 (Formerly Spec. No. M-158-1) through the fitting until some is forced out through the overflow. Then replace overflow plug.
   c. Retarder cylinders furnished subsequent to August, 1946 have a lubricating fitting and an overflow cock located opposite one another in the cylinder flange. To lubricate, open grease overflow cock in cylinder flange. Move retarder to closed position and apply grease U. S. & S. Spec. No. 7651-2 (Formerly Spec. No. M-158-1) through the fitting until some is forced out through the overflow cock. Then close overflow cock.
5. The exposed threads of the brake beam adjusting screws and exposed surfaces of pins and piston rod should be coated with Rustproof Compound U. S. & S. C.N. 41092.

B. Method and Frequency of Lubrication

After the retarder has been in service for awhile, the proper interval between lubrications can be determined. At the start, we recommend that the retarder be lubricated at least once for each 10,000 cars retarded. We strongly recommend the use of a power-operated compressor for lubricating the parts of the cylinder unit covered in A (1), (2) and (3); that is, those that are lubricated with grease, Spec. No. M-7650-01 (Formerly Spec. No. 2513), because, with its use, the bearings can be more satisfactorily lubricated than with a hand compressor, and, in addition, a great saving in the time required for lubrication will be effected. A separate hand compressor can be used for lubricating the piston of the cylinder and the control valve, using cylinder lubricant, Spec. No. M-7651-2 (Formerly Spec. No. M-158-1). However, if many retarders are involved, an additional power-operated compressor is recommended for this purpose.

VI. RECONDITIONING

For the reconditioning of retarder, see Service Specification SU-3659 which can be obtained from U. S. & S. on request.

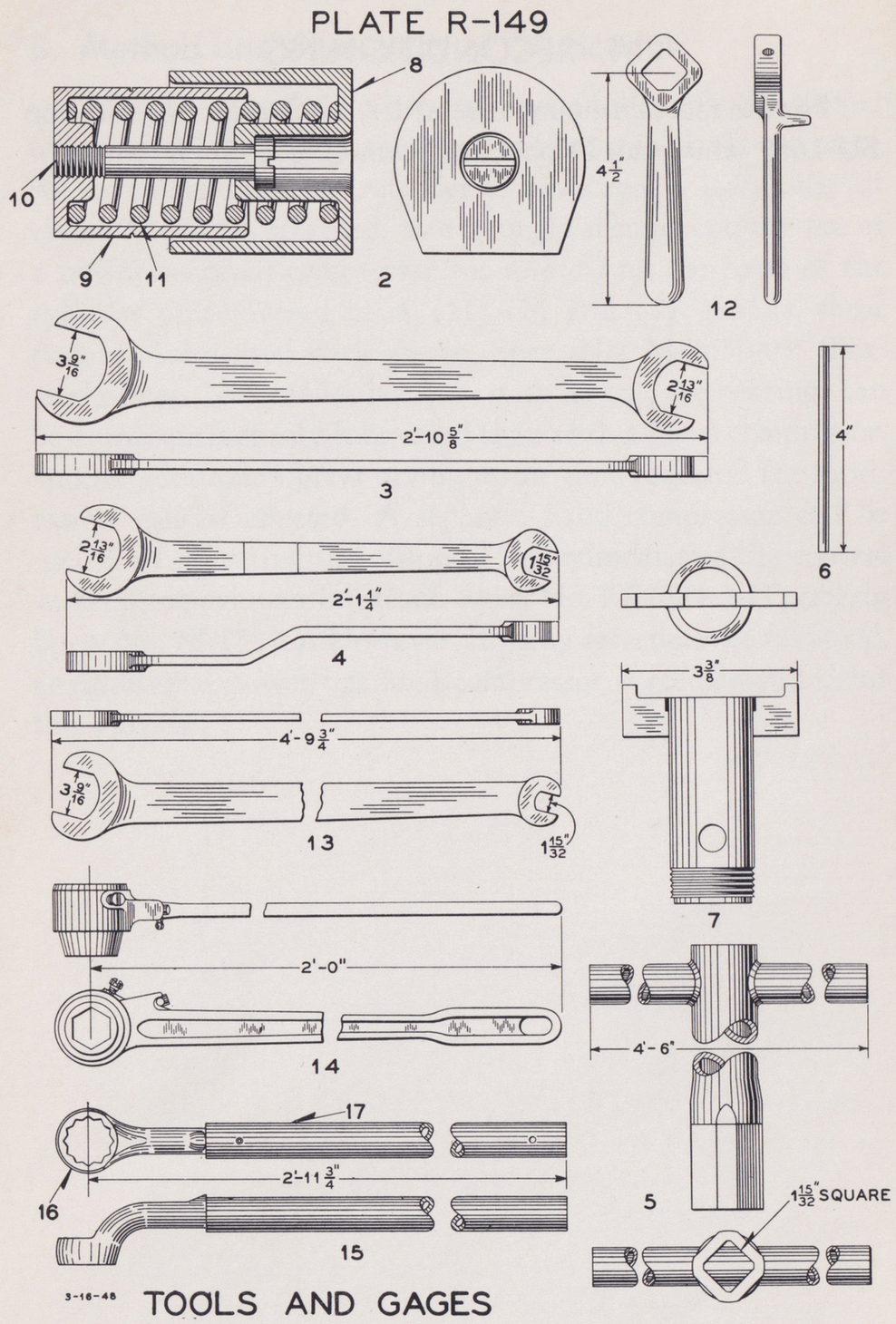
PLATE R-149
8
10
9
11
2
4 1/2"
12
3 9/16"
2 13/16"
2'-10 5/8"
3
4"
6
2 13/16"
1 15/32"
2'-1 1/4"
4
3 3/8"
7
4'-9 3/4"
3 9/16"
13
1 15/32"
2'-0"
14
4'-6"
17
2'-11 3/4"
16
5
1 15/32" SQUARE
15
3-16-48
TOOLS AND GAGES

FIG. 4

NOTES

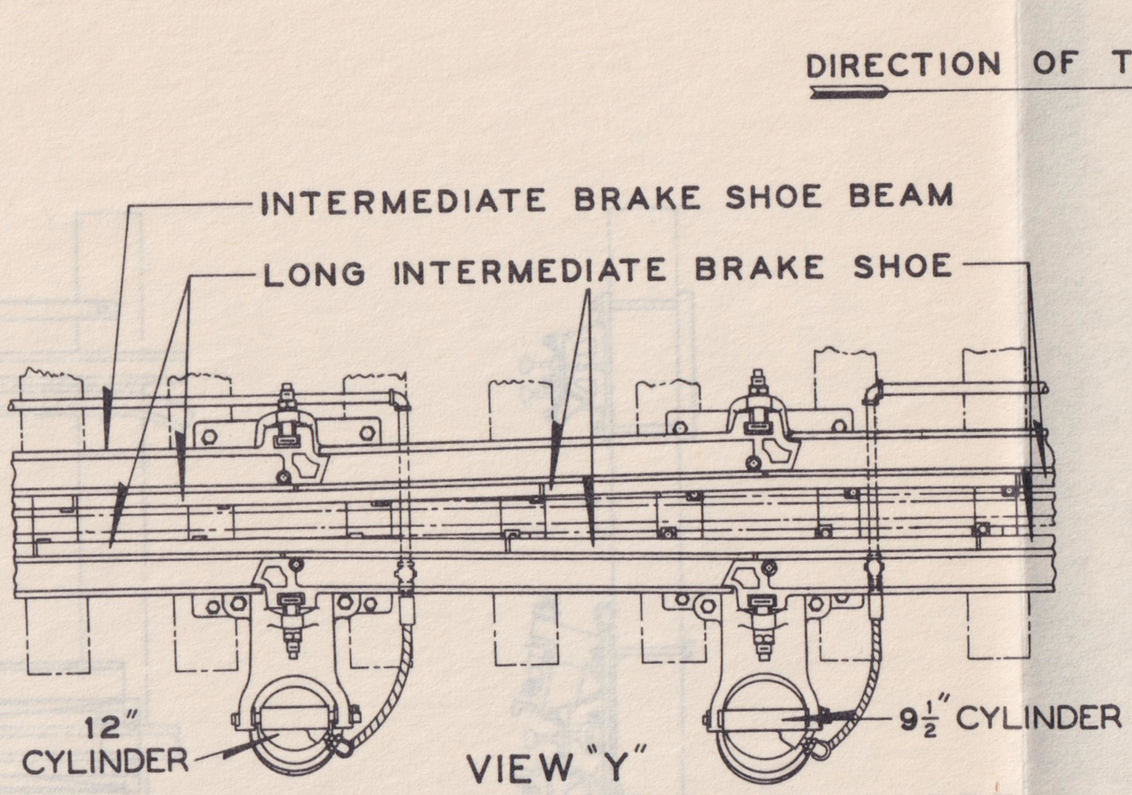

VIEW "Y"

PORTION OF LONG RETARDER WHERE CONTROL IS SECTIONALIZED.
(ONE PART SHOWN OPEN AND OTHER CLOSED)

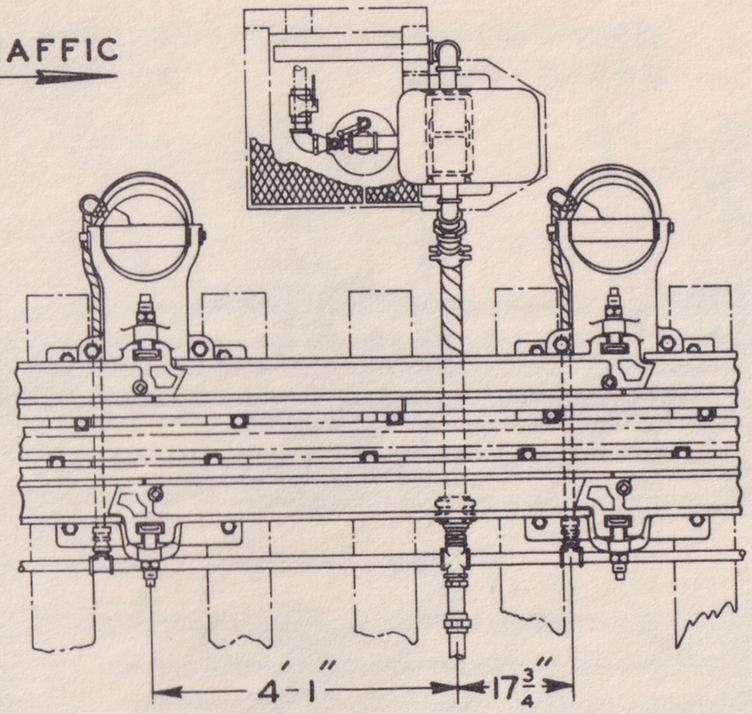

VIEW "W"

LEFT HAND APPLICATION OF CONTROL VALVE.

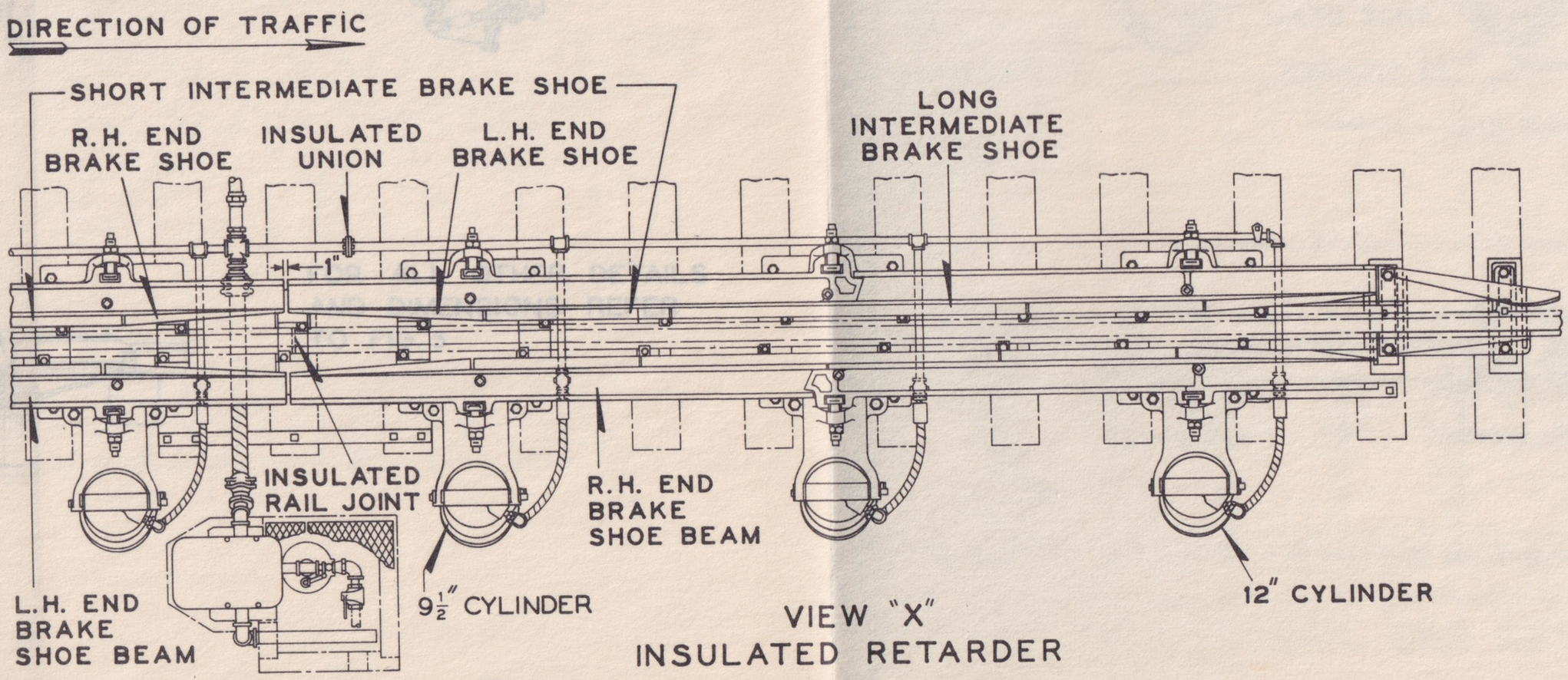

VIEW "X"

INSULATED RETARDER

FIG. 6

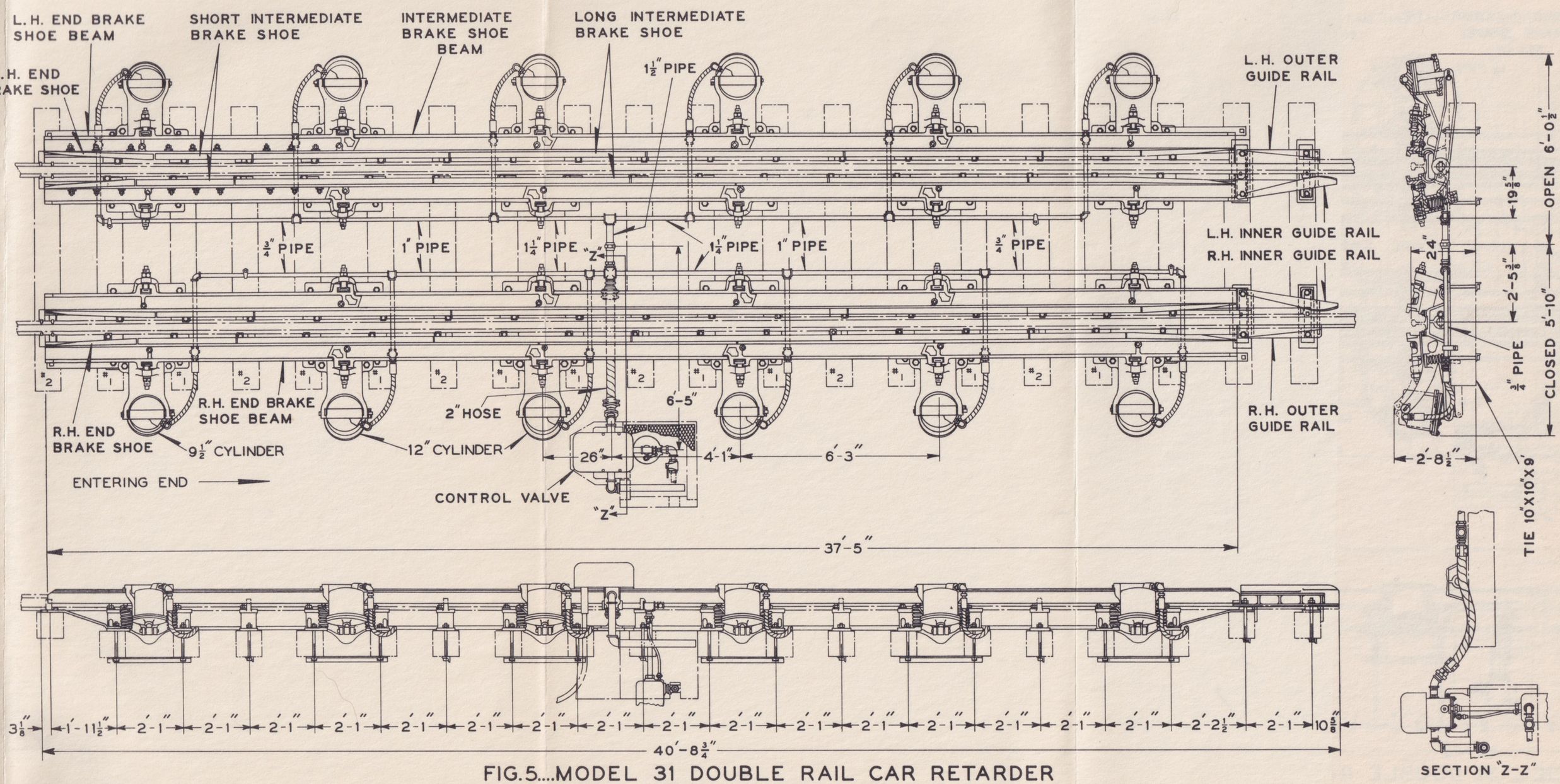

FIG.5....MODEL 31 DOUBLE RAIL CAR RETARDER

FIG. 5

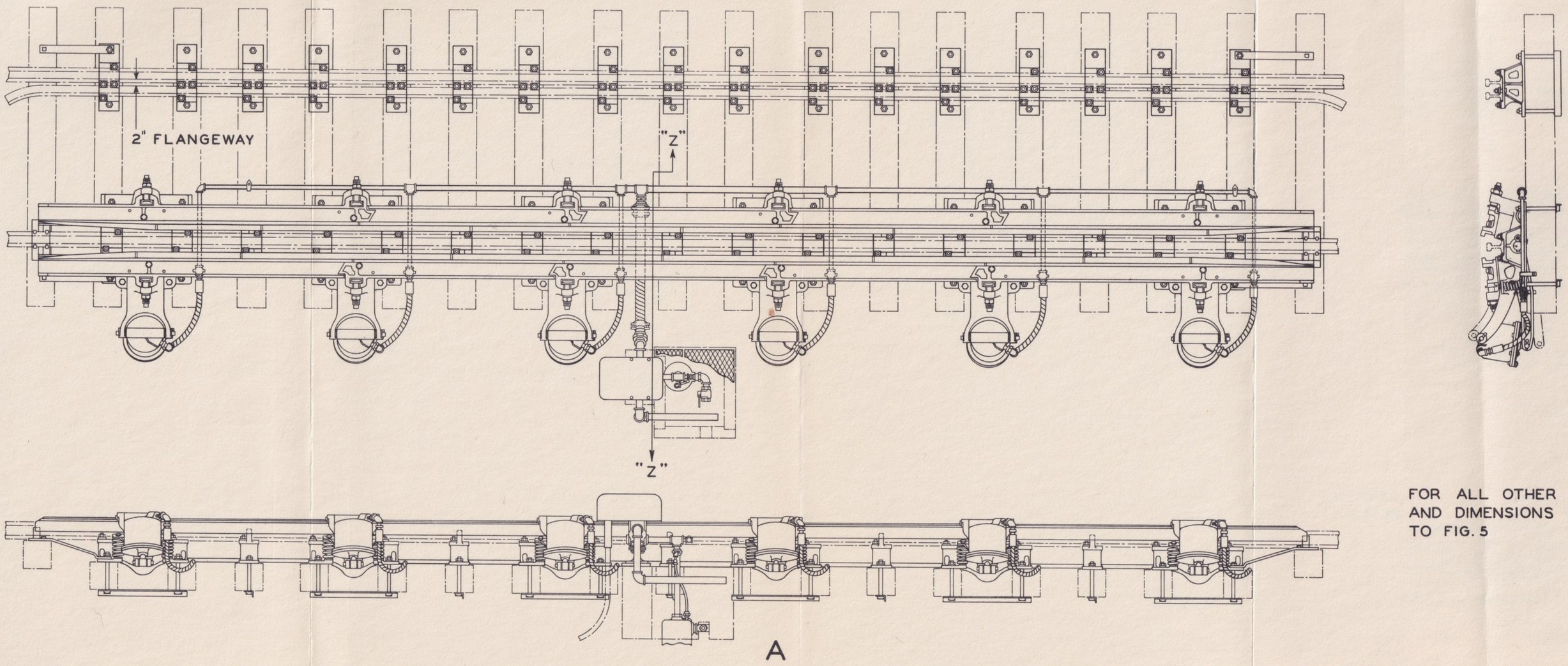

FIG. 6....MODEL 31 SINGLE RAIL CAR RETARDER

FOR ALL OTHER DETAILS AND DIMENSIONS REFER TO FIG. 5

FIG. 6

1. LUBRICATION DURING ASSEMBLY

(A) All lever pins, pin retainers & holes into which they fit should be coated with grease Spec. M7650-01.
(B) Housing for spring bolt assembly in lower lever to be packed with approx. 2 lbs. of grease Spec. M7650-01.

2. LUBRICATION AFTER ASSEMBLY

(A) Bearings, pins, bolts, etc., having fittings [14 in all] designated 2A to be lubricated with grease Spec. M7650-01. When lubricating brake beam adjustment screws, loosen lock nuts.
(B) Cylinder - open grease overflow cock in cylinder flange. Move retarder to closed position and apply grease Spec. M7650-01 through pressure fitting 2B until some is forced out through the overflow cock. Then close overflow cock.

See Section V for lubrication of cylinders furnished prior to August, 1946.

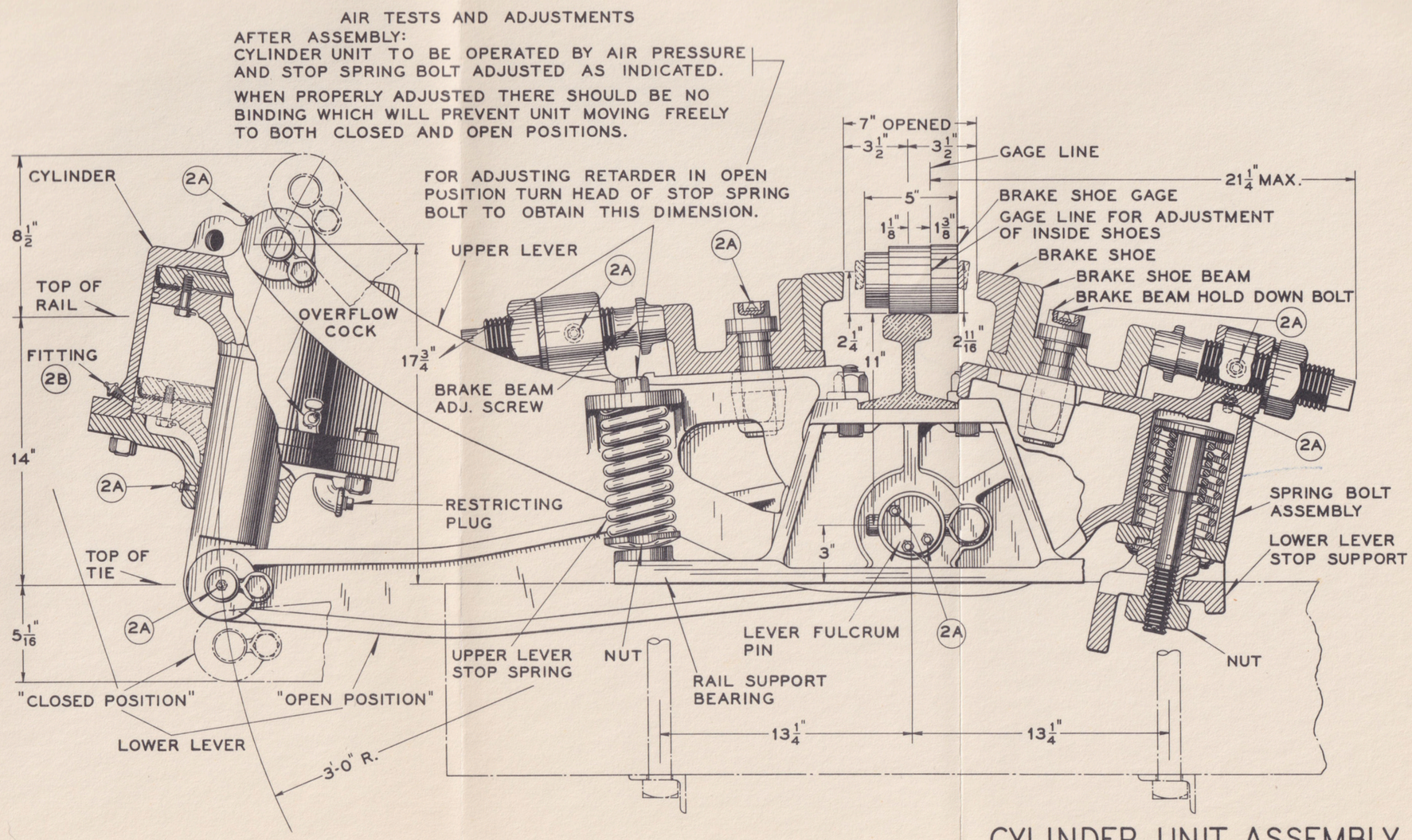

CYLINDER UNIT ASSEMBLY

FIG. 7